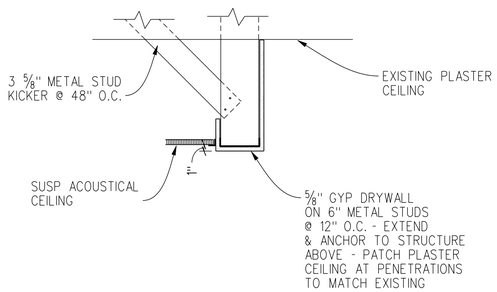


BULKHEAD DETAIL — SCALE 1 (0, 1, 2FT) — 09

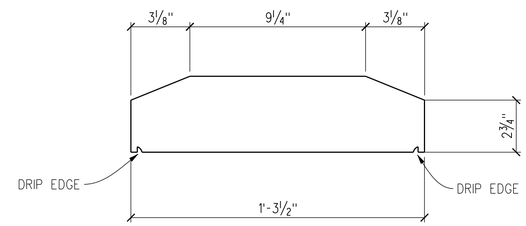


SEATING WALL

LIMESTONE DETAIL — SCALE 3 (0, 2 in, 4 in, 6 in) — 06

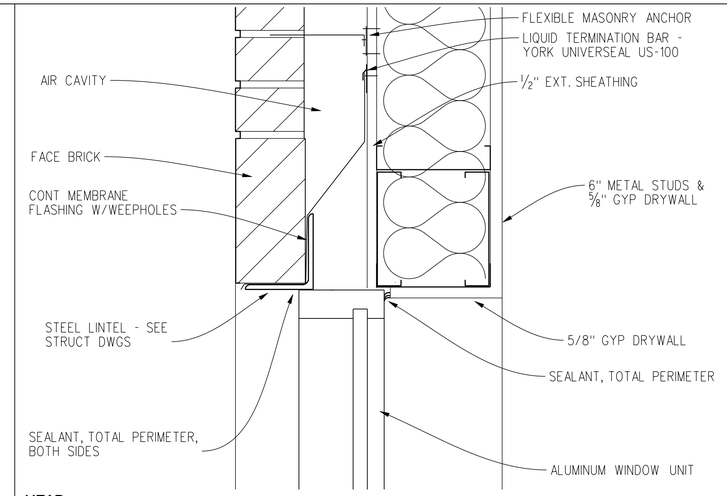


HEAD

WINDOW DETAIL — SCALE 3 (0, 2 in, 4 in, 6 in) — 03

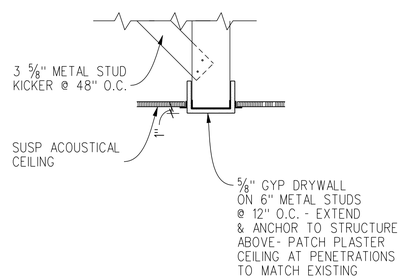


BULKHEAD DETAIL — SCALE 1 (0, 1, 2FT) — 08

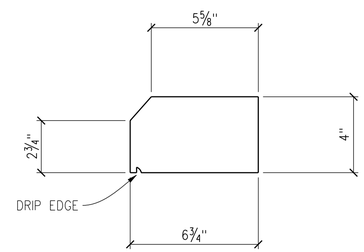


PILASTER BASE

LIMESTONE DETAIL — SCALE 3 (0, 2 in, 4 in, 6 in) — 05

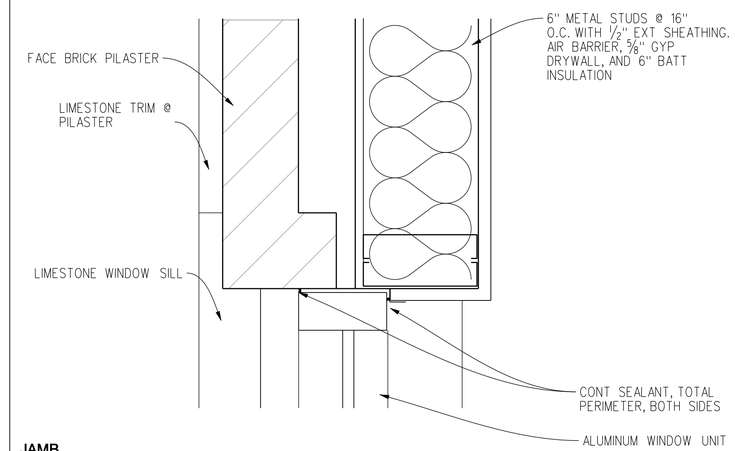


JAMB

WINDOW DETAIL — SCALE 3 (0, 2 in, 4 in, 6 in) — 02

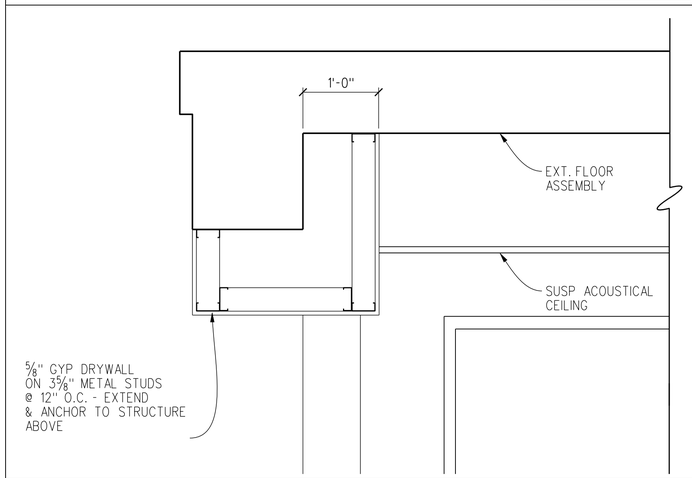


BULKHEAD DETAIL — SCALE 1 (0, 1, 2FT) — 07

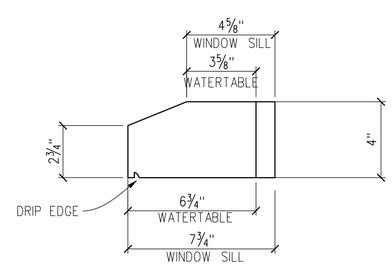


WATERTABLE/SILL

LIMESTONE DETAIL — SCALE 3 (0, 2 in, 4 in, 6 in) — 04

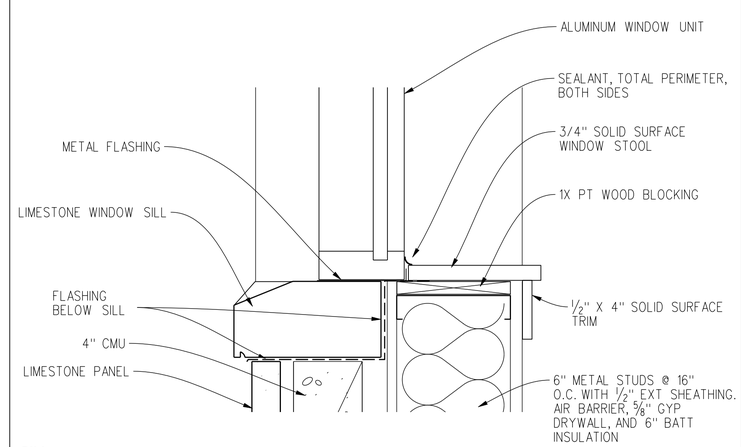


SILL

WINDOW DETAIL — SCALE 3 (0, 2 in, 4 in, 6 in) — 01

| NO. | DATE |
|---|---|
| 01 | 10-14-2011 FOR BIDDING |
| 02 | 10-31-2011 FOR PERMIT |
| 03 | 01-17-2012 FOR BIDDING & PERMIT |

# Alterations & Additions to Former Carnegie Library for New City Hall for North Vernon, Indiana

143 East Walnut Street
North Vernon, IN 47265

KZF DESIGN
Architecture | Engineering | Interiors | Planning

KZF DESIGN INC.
700 Broadway Street
Cincinnati, OH 45202-6000

TEL 513 621 6211
FAX 513 621 6530
WEB www.kzf.com

| DESIGNED | COMM. NO. |
|---|---|
| LEWIS | 5917.00 |
| DRAWN | DATE |
| SAID | 01-17-2012 |
| CHECKED | PROJ. MANAGER |
| BARTOLT | M. SMITH |

MISCELLANEOUS DETAILS

| DRAWING NUMBER | ISSUE |
|---|---|
| A502 | 03 |