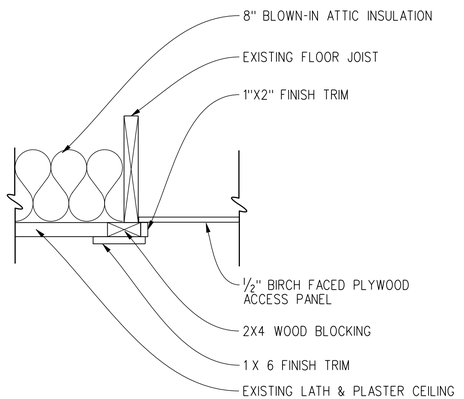


ATTIC ACCESS PANEL

DETAIL SCALE: 1 1/2" = 1'-0" 08

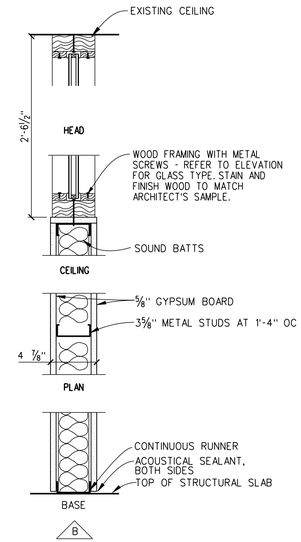


B SCALE: 1 1/2" = 1'-0" 05

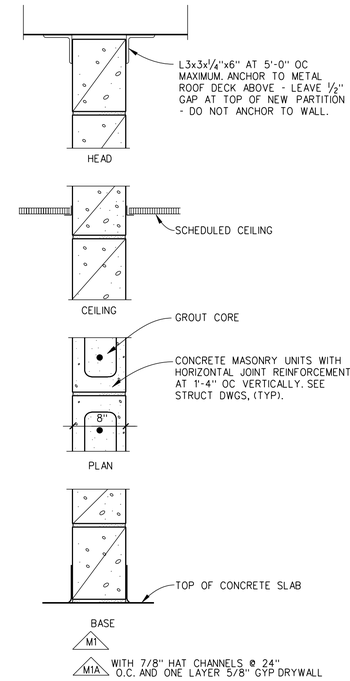


M1 SCALE: 1 1/2" = 1'-0" 03

1. WHERE SHELVING IS NOTED ON DRAWINGS, PROVIDE STUD CONDITIONS AND BLOCKING TO SUPPORT A LOAD OF 100 POUNDS PER LINEAL FOOT.

NOTE:
1. STAIRS TO BE SLOPED AT 1/4" PER FOOT TO ALLOW FOR POSITIVE DRAINAGE.

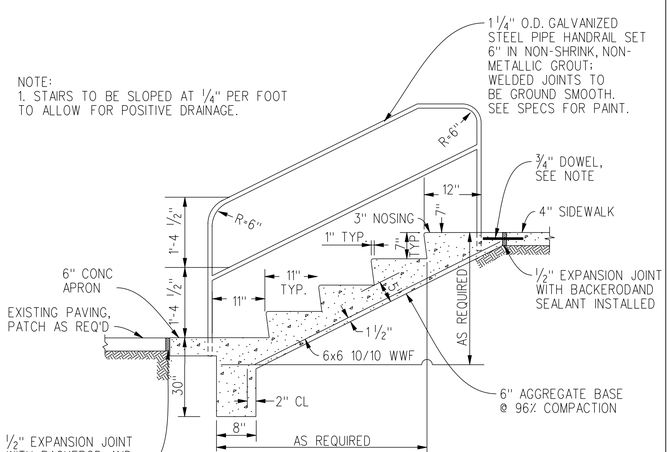


SIDEWALK STEPS

SEE FLOOR PLAN ON SHEET A102 FOR REQUIRED NUMBER OF RISERS

NOTE:
3/4" DIA. SMOOTH DOWELS 18" LONG AT 12". PAINT AND OIL ONE END OF DOWEL AND SUPPLY EXPANSION CAP AS PER SPECIFICATIONS. MAINTAIN 12" MINIMUM CLEARANCE FROM DOWEL TO EDGE OF SLAB.

EXTERIOR STEPS

DETAIL 07

NOT USED

04

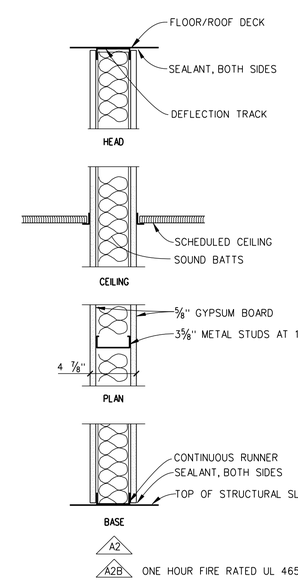


A2 SCALE: 1 1/2" = 1'-0" 02

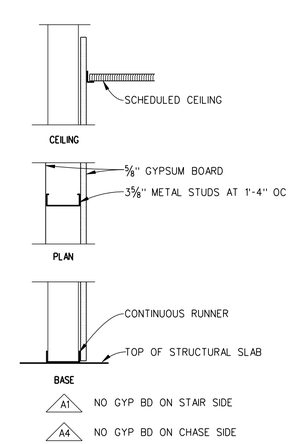


A SCALE: 1 1/2" = 1'-0" 01

| NO. | DATE |
|---|---|
| 01 | 10-14-2011 FOR BIDDING |
| 02 | 10-31-2011 FOR PERMIT |
| 03 | 01-17-2012 FOR BIDDING & PERMIT |

# Alterations & Additions to Former Carnegie Library for New City Hall for North Vernon, Indiana

143 East Walnut Street
North Vernon, IN 47265

KZF DESIGN
Architecture | Engineering | Interiors | Planning

KZF DESIGN INC.
700 Broadway Street
Cincinnati, OH 45202-6000

TEL 513 621 6211
FAX 513 621 6530
WEB www.kzf.com

| DESIGNED | COMM. NO. |
|---|---|
| LEWIS | 5917.00 |
| DRAWN | DATE |
| SAID | 01-17-2012 |
| CHECKED | PROJ. MANAGER |
| BARTOLT | M. SMITH |

PARTITION TYPES

MISCELLANEOUS DETAILS

| DRAWING NUMBER | ISSUE |
|---|---|
| A501 | 03 |